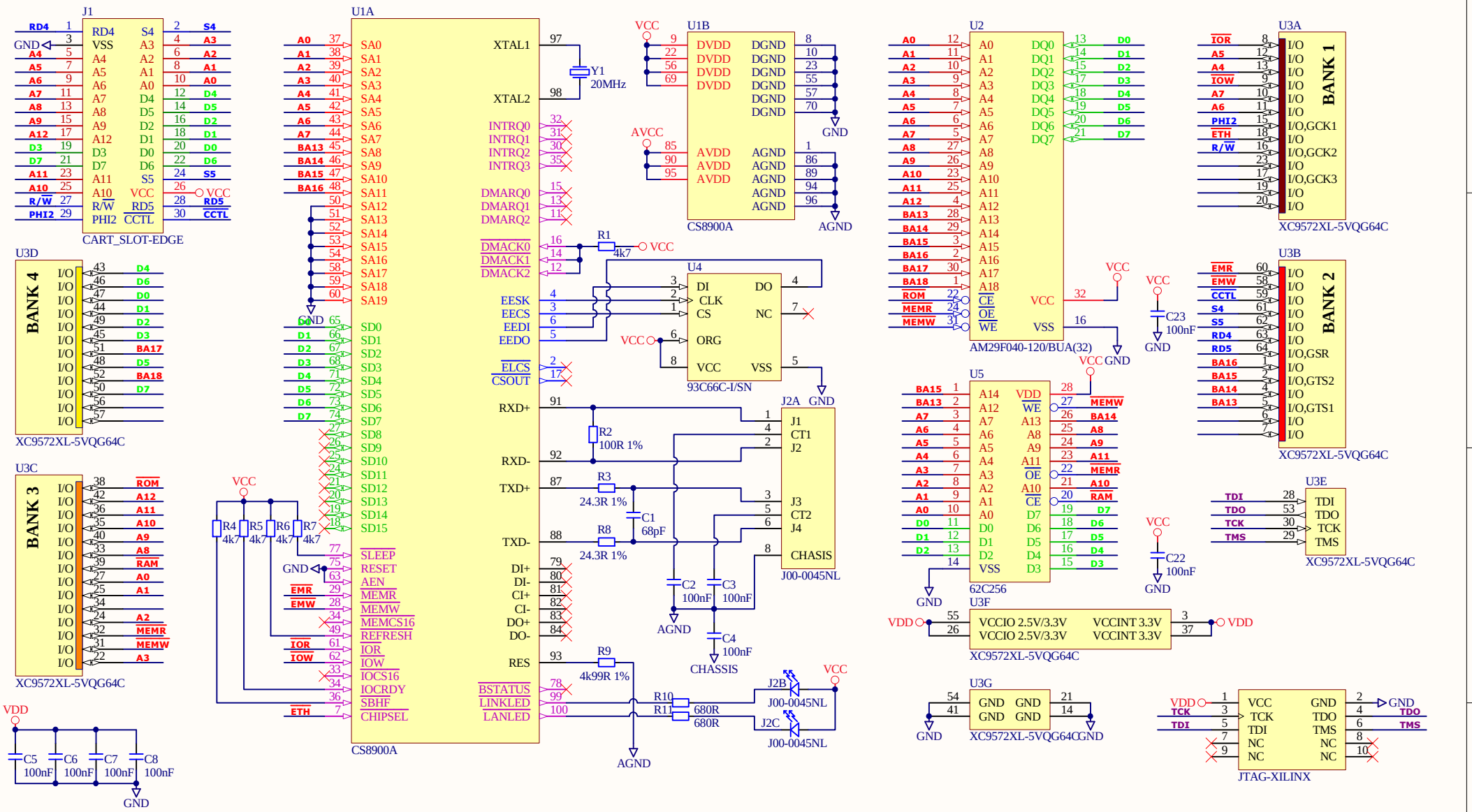

Title	Atari8Ethernet cartridge	
Size A4	Number	Revision 1.0
Date: 2011-03-04		Sheet 1 of 1
File: D:\Private\A8E\A8E.SchDoc		Drawn By: Sebastian Bartkowicz